REC TEC GRILLS

COMPETITION CART

Owner's Manual

Model #RTCC

REC TEC GRILLS

COMPETITION CART

⚠WARNING!⚠

FOR OUTDOOR USE ONLY!

DO NOT STORE OR USE COMBUSTIBLE MATERIALS IN OR NEAR THIS APPLIANCE.

TO PREVENT INJURY, NEVER ATTEMPT TO MOVE GRILL WHILE HOT OR WITHOUT ASSISTANCE.

NEVER STORE ANY GRILL IN A SMALL SPACE OR PLACE IN A VEHICLE UNLESS COMPLETELY COOL AND FIRE IS VERIFIED AS EXTINGUISHED

LEAVE A MINIMUM OF 60” CIRCUMFERENCE BETWEEN GRILL, DECKS, HOUSES OR ANY COMBUSTIBLE MATERIALS.

USE ON LEVEL GROUND AWAY FROM OVERHANGING ROOFS OR EAVES.

REC TEC GRILLS

COMPETITION CART

REC TEC COMPETITION CART

Owner's Manual and User's Guide

Congratulations on the purchase of your new **REC TEC COMPETITION CART**. With proper care and maintenance, your cart will provide you years of trouble free operation. Please review the following information carefully for useful tips and information that will help you utilize your cart's features and benefits.

We want you to join the vibrant and growing community of REC TEC owners. Whether you want to contribute your own tips and recipes, learn from others, or a bit of both, please jump right in. You now have an incredible tool for cooking. Let's see how you use it!

Join our online community at: **Website: RecTecGrills.com**
Facebook: facebook.com/RecTecGrills
Twitter: twitter.com/RecTecGrills
YouTube: youtube.com/RecTecGrills
Instagram: instagram.com/rectecgrills

Thank you for choosing REC TEC GRILLS!!

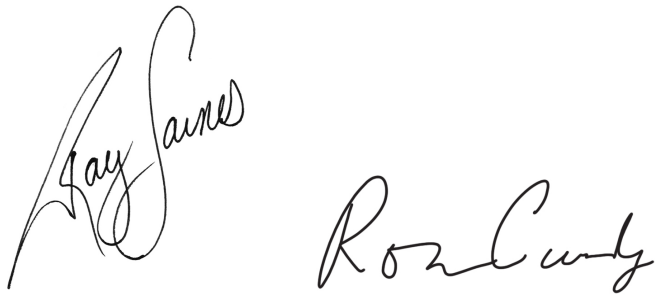

Ray Carnes & Ron Cundy, Co-Founders, REC TEC Industries, LLC

©2018, Rec Tec Industries, LLC

Contents

Owner's Manual and User's Guide 1

Important Safety Information 3

Carton Contents 4

SPECS 5

Assembly.....6

Mounting RT-680 / RT-700.....7

Maintenance and Cleaning 8

REC TEC COMPETITION CART
ONE (1) Year Limited Warranty.....9

©2018, Rec Tec Industries, LLC

Important Safety Information

Warning: Do not allow persons to operate or assemble this competition cart until they have read this manual and have developed a thorough understanding of how the competition cart works.

⚠ **Maximum load 800 lbs. NEVER OVERLOAD CART.**

⚠ **Do not use this cart for transporting passengers.**

⚠ **Do not operate if any part is damaged or broken.**

⚠ **Do not use on steep inclines where tipping may occur.**

⚠ **Do not allow children to use cart. IT IS NOT A TOY.**

⚠ **Not for highway use. Do not exceed 5 mph.**

⚠ **Do NOT modify cart. Unauthorized modification may impair the function and/or safety and could affect the life of the equipment.**

⚠ **For outdoor use only. Do not use in any enclosed area. Use on Level Surface, away from overhanging easements.**

⚠ **Keep grill and cart 60" or more from any combustible surface.**

⚠ **Your REC TEC grill gets very hot; keep young children and animals away while in use.**

⚠ **Never put your grill in a vehicle without first ensuring that it is completely cool and that no hot embers, pellets or ashes remain in the firepot or auger.**

⚠ **Do not touch cooking chamber or attempt to move your REC TEC grill and cart while operating or while the grill is hot. Make sure the fire is completely out and that the grill is completely cool before transporting the grill and cart.**

⚠ **Before covering your grill and cart, make sure that the grill has cooled completely.**

©2018, Rec Tec Industries, LLC

Carton Contents

Please note that during shipping some movement may have taken place, so a complete visual inspection is required. Be sure to inspect entire cart after removing the protective shipping carton. Some surfaces may be sharp, so wear gloves when assembling.

Your carton contains the following:

- ☐ Front Panel (A)
- ☐ Back Panel (B)
- ☐ Left Panel (C)
- ☐ Right Panel (D)
- ☐ Internal Grill Shelf (E)
- ☐ Access Panel (F)
- ☐ **4** Solid Rubber Locking Caster Wheels (G)
- ☐ **40** Small Black Screws (H)
- ☐ **16** Caster Bolts (I)
- ☐ **16** Caster Locking Washers (J)
- ☐ **16** Caster Flat Washers (K)
- ☐ **8** Small Chrome Screws (L)
- ☐ **8** Small Chrome Locking Washers (M)
- ☐ **8** Small Chrome Flat Washers (N)

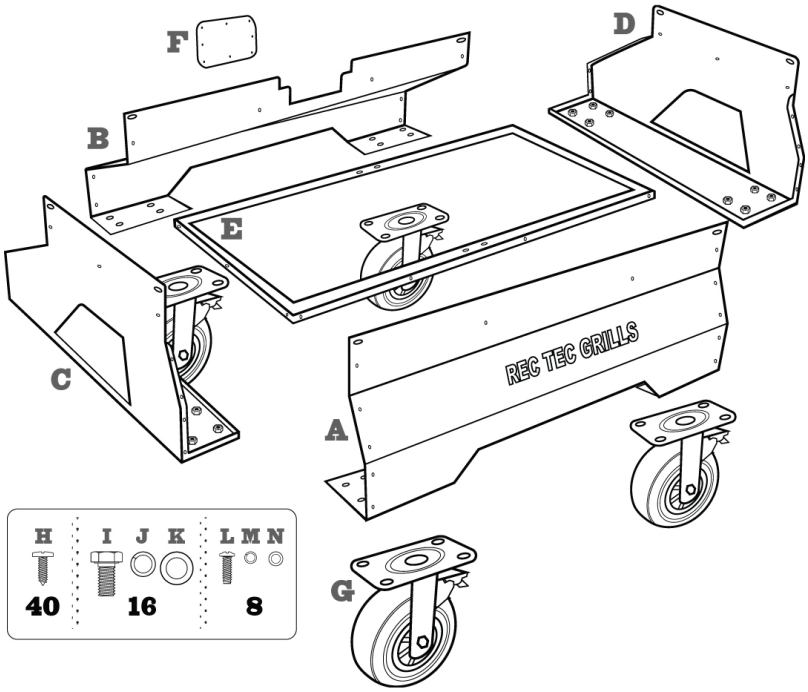

Questions?

Call our customer service at 1-706-922-0890
10am-8pm EST. Mon-Thurs;
10am-7pm EST Fri;
9am-3pm EST Sat.

©2018, Rec Tec Industries, LLC

SPECS

Below is a list of features and specifications for the REC TEC COMPETITION CART:

Fits RT-680 and RT-700
800 lb. load capacity
Weight: 67 lbs.
Height: 22.75 in.
Width: 34.25 in.
Depth: 26.25 in.
Hi-Temp powder coated steel construction
Heavy duty solid rubber locking caster wheels
Rear access panel
Stamped REC TEC GRILLS logo
1 year limited warranty

Questions?
Call our customer service at 1-706-922-0890
10am-8pm EST. Mon-Thurs;
10am-7pm EST Fri;
9am-3pm EST Sat.

©2018, Rec Tec Industries, LLC

Assembly

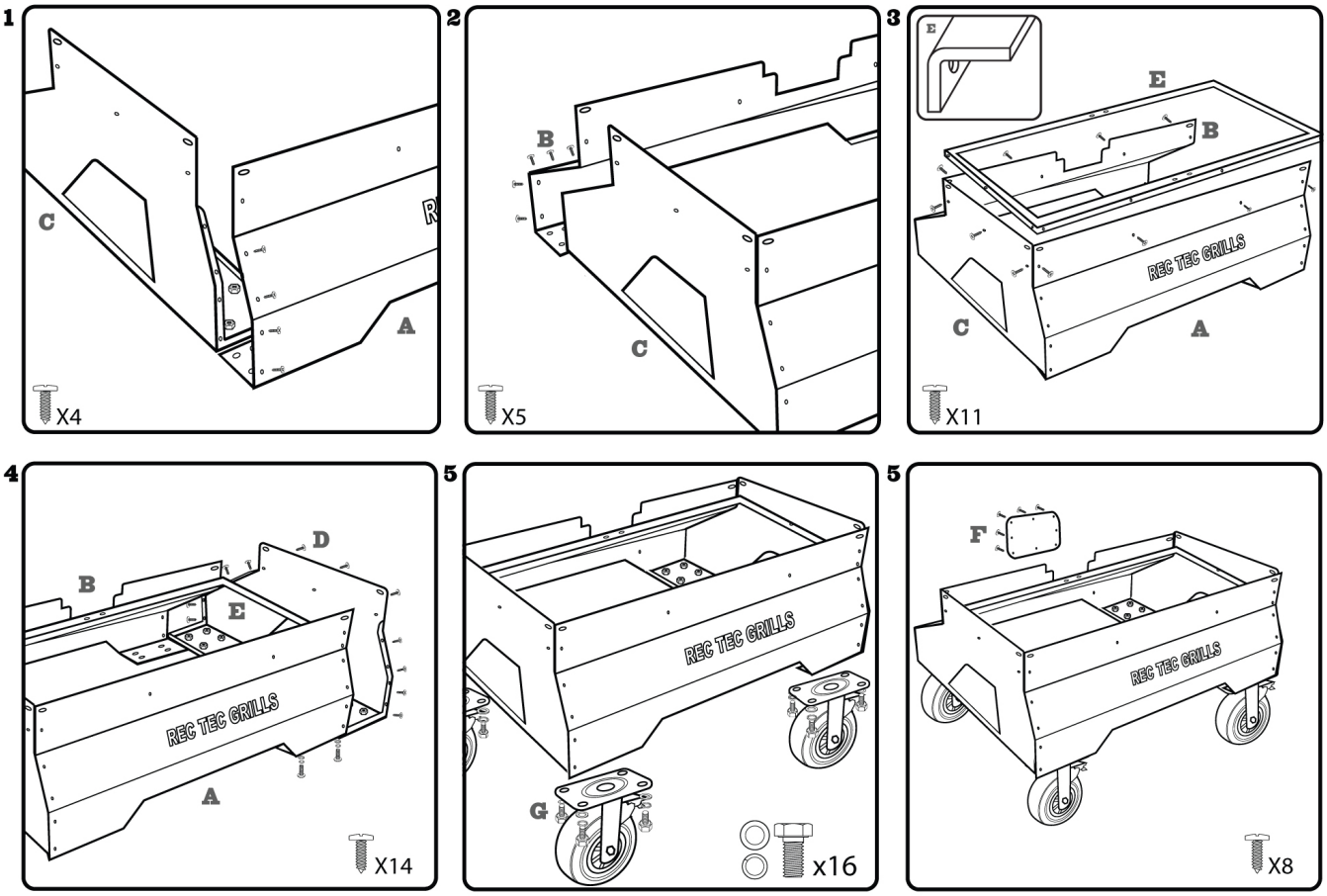

1. Attach front panel (A) to left panel (C) using 4 small black screws (H).
2. Attach back panel (B) to left panel (C) using 5 small black screws (H).
3. Attach internal grill shelf (E) to front (A), left (C) and back (B) panels using 11 black screws (H). **Make sure to install grill shelf as shown in diagram 3, pictured above.**
4. Attach right panel (D) to (A), (B), (E) assembly using 12 black screws (H).
5. Carefully flip cart on its back. Attach locking caster wheels (G) to bottom of cart using *per wheel: 4 caster bolts (I), 4 lock washers (J), and 4 flat washers (K) using order; bolt (I) - lock washer (J) - flat washer (K).
6. Install access panel (F) to back panel (B) using 8 small black screws (H).

Questions?

Call our customer service at 1-706-922-0890
10am-8pm EST. Mon-Thurs;
10am-7pm EST Fri;
9am-3pm EST Sat.

©2018, Rec Tec Industries, LLC

Mounting RT-680 / RT-700

1. Remove all pellets, flame deflector shield, drip pan, cooking grates, and drip bucket from grill.
2. With a partner, carefully lay grill on its hopper using left-side shelf and pull bar.
3. Remove 8 total bolts (2 per leg) from skirt of grill and set aside.
4. Remove legs and bottom shelf assembly from grill body (legs should slide out easily).
5. Collapse legs parallel to bottom shelf for convenient storage.
6. In anticipation of placing grill in cart, rotate grill upright.
7. Move COMPETITION CART into position in front of grill and orient front to back.
8. With partner, lift grill using left-side shelf and pull bar and place into cart. Rest grill skirt on internal grill shelf.
9. Align mounting holes in cart to mounting holes in grill skirt.
10. Insert NEW long bolts (L) through cart and grill skirt. place lock washer (M) and washer (N)
11. HAND TIGHTEN ONLY UNTIL ALL BOLTS ARE IN PLACE.
12. Fully tighten all hardware.

Questions?

Call our customer service at 1-706-922-0890
10am-8pm EST. Mon-Thurs;
10am-7pm EST Fri;
9am-3pm EST Sat.

©2018, Rec Tec Industries, LLC

Maintenance and Cleaning

A few simple steps will ensure that your REC TEC COMPETITION CART will give you many years of service with minimal effort.

- When not in use, store the COMPETITION CART covered.
- Periodically check hardware. Re-tighten if any hardware is loose.
- Lubricate casters periodically for easy operation.
- Use a mild soap and water to clean the surfaces of the cart. AVOID USING CAUSTIC CLEANERS.

Questions?

Call our customer service at 1-706-922-0890
10am-8pm EST. Mon-Thurs;
10am-7pm EST Fri;
9am-3pm EST Sat.

©2018, Rec Tec Industries, LLC

REC TEC COMPETITION CART
ONE (1) Year Limited Warranty

This limited warranty covers the REC TEC COMPETITION CART manufactured by “Rec Tec Industries, LLC.” The REC TEC COMPETITION CART carries a 1 year limited warranty from the date of purchase by the original owner against defects in material and workmanship when subjected to normal residential use. Limited warranty does not apply to paint, grill cover, or damage caused from corrosion.

Conditions of Limited Warranty

1. During the term of the limited warranty, Rec Tec Industries, LLC’s (RTI) obligation shall be limited to replacement of covered, failed components. RTI will repair or replace parts returned to RTI, freight prepaid, if the part(s) are found by RTI to be defective upon examination. RTI shall not be liable for transportation charges, labor costs, or export duties.
2. RTI takes every precaution to utilize materials that retard rust including the use of high temperature paint where advisable. Even with these safeguards, the protective coatings can be compromised by various substances and conditions beyond RTI’s control. High temperatures, excessive humidity, chlorine, industrial fumes, fertilizers, lawn pesticides and salt are some of the substances that can affect paint and metal coatings. For these reasons, the limited warranties DO NOT COVER RUST OR OXIDATION.
3. The warranty is based on residential use. Warranty coverage does not apply to products used in commercial applications.

Exceptions to the Limited Warranty

There is no written or implied performance warranty on REC TEC GRILLS, as the manufacturer has no control over the installation, operations, cleaning, maintenance or the type of fuel burned. This limited warranty will not apply nor will RTI assume responsibility if your product has not been installed, operated, cleaned and maintained in strict accordance with the manufacturer’s instructions. The warranty does not cover damage or breakage due to misuse, improper handling or modifications. NEITHER THE MANUFACTURER, NOR THE SUPPLIERS TO THE PURCHASER ACCEPTS RESPONSIBILITY, LEGAL OR OTHERWISE, FOR THE INCIDENTAL OR CONSEQUENTIAL DAMAGE TO THE PROPERTY OR PERSONS RESULTING FROM THE USE OF THIS PRODUCT. ANY WARRANTY IMPLIED BY LAW, INCLUDING BUT NOT LIMITED TO IMPLIED WARRANTIES OF MERCHANTABILITY OR FITNESS, SHALL BE LIMITED TO ONE (1) YEAR FROM THE DATE OF ORIGINAL PURCHASE. WHETHER A CLAIM IS MADE AGAINST THE MANUFACTURER BASED ON THE BREACH OF THIS WARRANTY OR ANY OTHER TYPE OF WARRANTY EXPRESSED OR IMPLIED BY LAW, MANUFACTURER SHALL IN NO EVENT BE LIABLE FOR ANY SPECIAL, INDIRECT, CONSEQUENTIAL OR OTHER DAMAGES OF ANY NATURE WHATSOEVER IN EXCESS OF THE ORIGINAL PURCHASE PRICE OF THIS PRODUCT. ALL WARRANTIES BY MANUFACTURER ARE SET FORTH HEREIN AND NO CLAIM SHALL BE MADE AGAINST MANUFACTURER ON ANY ORAL WARRANTY OR REPRESENTATION. Some states do not allow the exclusion or limitation of incidental or consequential damages, or limitations of implied warranties, so the limitations or exclusions set forth in this limited warranty may not apply to you. This limited warranty gives you specific legal rights and you may have other rights, which vary from state to state.

The limited warranty for One (1) year is in lieu of all other warranties expressed or implied, at law or otherwise, and RTI does not authorize any person or representative to assume for RTI any obligation or liability in connection with the sale of this product. This means that no warranties, either expressed or implied, are extended to persons who purchase the product from anyone other than RTI or an authorized RTI Distributor.

Procedure for Warranty Service

Call RTI at 1-706-922-0890 for repair or replacement of your covered parts.

Be prepared to furnish the following information:

- Purchaser’s name, model and serial number of grill and date of purchase.
- An accurate description of the problem.

©2018, Rec Tec Industries, LLC

REC TEC GRILLS

COMPETITION CART

©2018, Rec Tec Industries, LLC

©2018, Rec Tec Industries, LLC